HOME DIGITAL DVB-T MODULATOR

EN-106

- It provides a DVB-T multiplex (Terrestrial Digital Television) in the VHF / UHF band from any audio / video source: TV satellite receivers, security cameras, video players, computer video outputs, etc.
- The selection of an output channel for the modulated signal is done easily via keyboard and display.
- Connection to PC via USB.
- RF Combiner with an antenna signal and other passive modulators works even when it is off.
- F type output connectors.
- RCA input connectors.
- Compact and small, 40 mm high.
- Stereo sound, MPEG-2 SD video.
- RF programmable output level.
- LCN programmable.
- DVB tables generation.

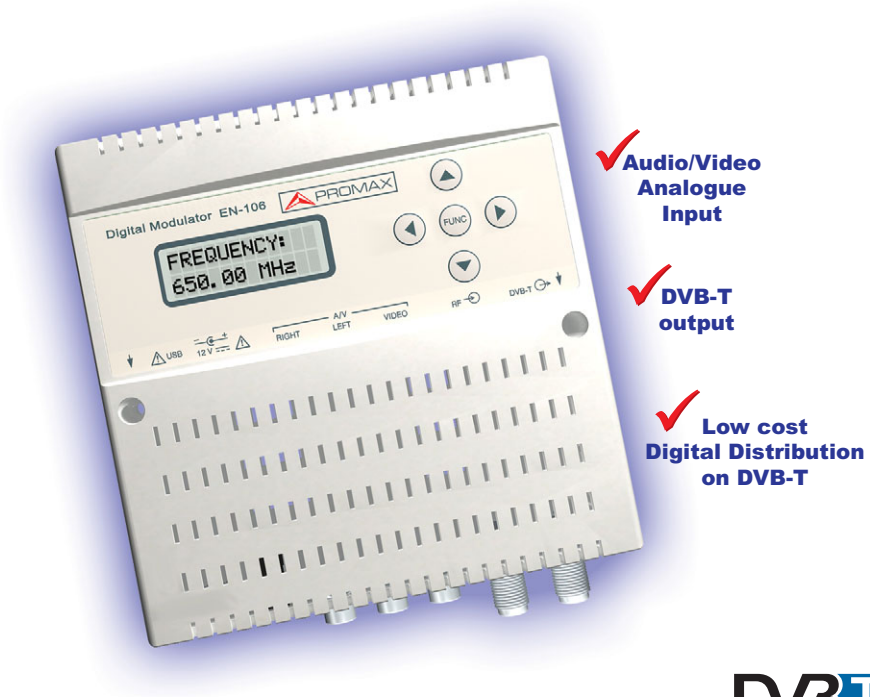

The **EN-106** home modulator sends audio / video signal from TV satellite receivers, closed-circuit television cameras (CCTV) or video players to a TV which uses DVB-T (Digital Terrestrial Television) standard.

Programming the EN-106 modulator is very easy through its keyboard and display. It also provides connection to the PC via USB.

The **EN-106** includes an RF combiner on which a channel modulated from existing antenna signals can be added easily. It is a passive combiner that works even if the modulator is off. It can also be used in series with other **EN-106** modulators and with any other RF signal so the number of channels in the coaxial cable on the SMATV system can be increased as desired.

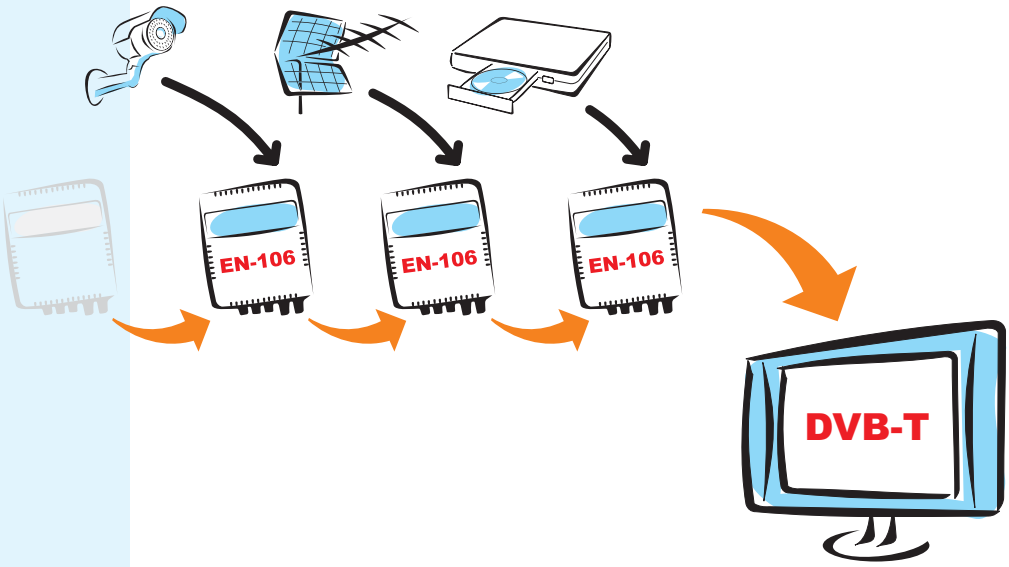

HOME DIGITAL DVB-T MODULATOR

EN-106

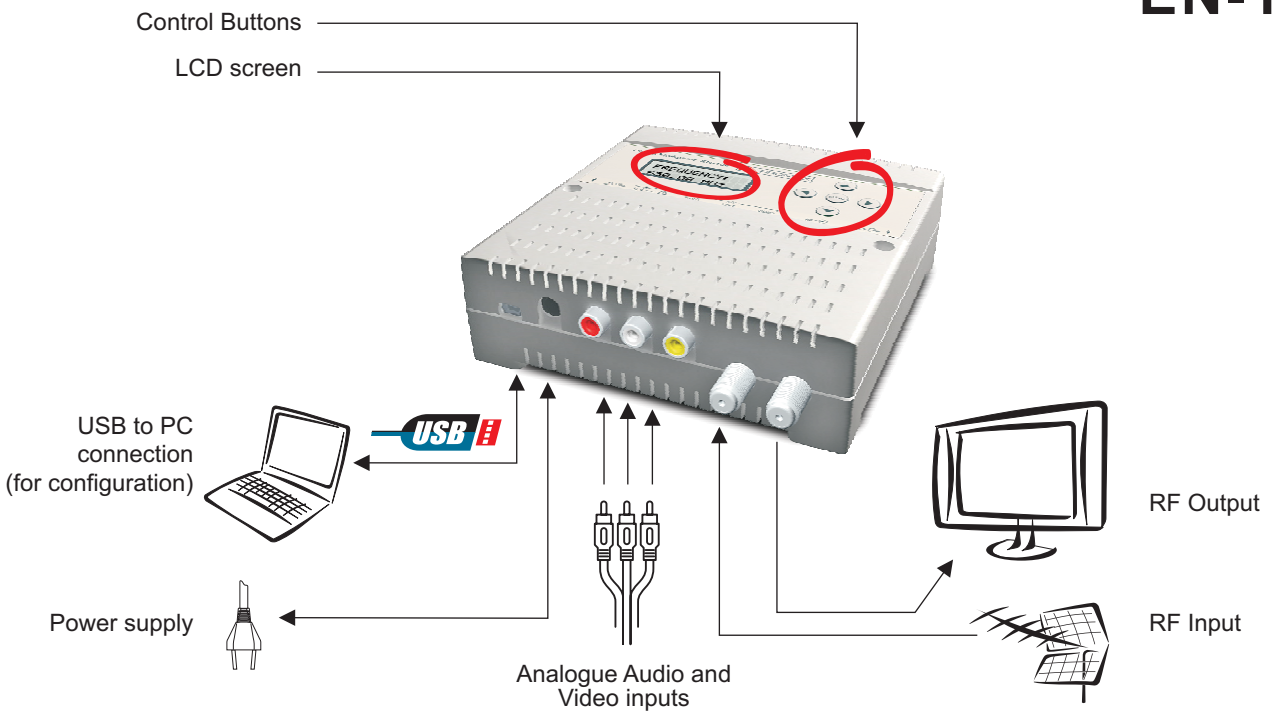

SPECIFICATIONS	EN-106 - HOME DIGITAL DVB-T MODULATOR
Inputs	
Input Channels	1
Video	Composite (CVBS) 1 Vpp
Video System	PAL / SECAM / NTSC
Audio	0.5 - 2 Vpp
Audio System	2 x Mono / Stereo
Compression	
Video	MPEG-2 MP@ML
Video Resolution	720x576, 25 fps (PAL), 720x480, 30 fps (NTSC)
Audio	MPEG-1 Layer II
Insertion of DVB Tables	SDT, NIT
LCN Programming	Yes
Modulation	
Standard	DVB-T (ETSI EN 300 744)
Constellation	QPSK, 16QAM, 64QAM
Guard interval	1/4, 1/8, 1/16, 1/32
Code Rate	1/2, 2/3, 3/4, 5/6, 7/8
Carriers	2K, 8K
Frequency margin	From 100 to 900 MHz (channels S01 to C69)
MER	38 dB typical
Output level	80 dBµV
Attenuation Steps	1 dB
Connections	
Video	RCA female 75 Ω
Audio	RCA female 75 Ω
RF	2 x F female (loopthrough) 75 Ω
Power supply	External Power supply 220 V / 12 V
Dimensions	130 mm (W.) x 130 mm (H.) x 40 mm (D.)

SESIGN AND SPECIFICATIONS ARE SUBJECT TO CHANGES WITHOUT PRIOR NOTICE. 03/11.

PROMAX ELECTRONICA, S.A.
Francesc Moragas, 71 * Apartado 118 * 08907 L'HOSPITALET DE LLOBREGAT * SPAIN
Tel: (+34) 93 184 77 02 * Fax: (+34) 93 338 11 26 * e-mail:promax@promaxelectronics.com * http://www.promaxelectronics.com